Page 1 of 1	CUSTOMER DRAWING	greiner bio-one
Revision 3	Thin Wall PCR Tube, 0.2 ml	

Valid for Item-No.: 683201, 683271, 683273, 683274, 683275, 683276, 683277

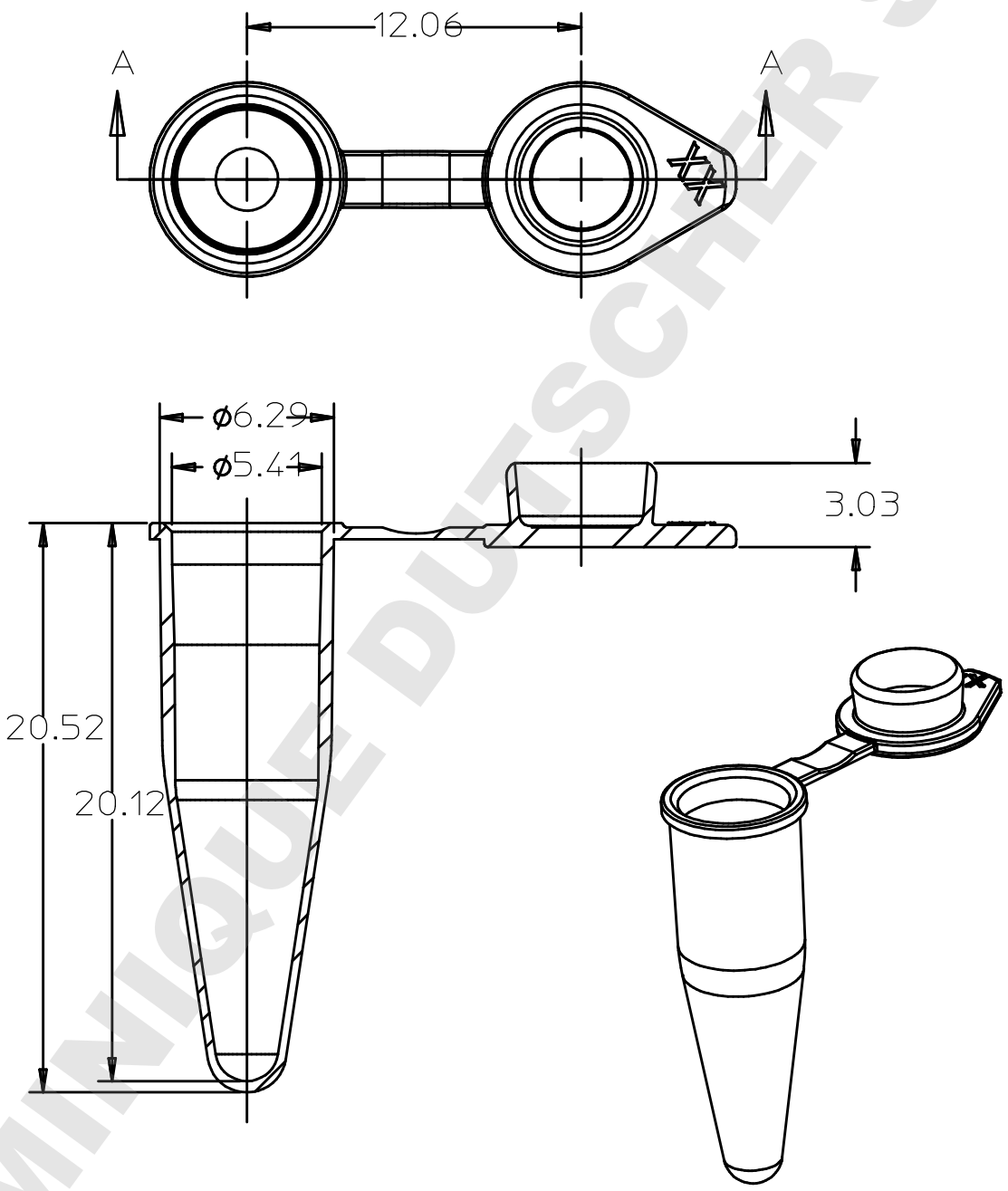

DOMINIQUE DUTSCHER SAS

"All dimensions in mm"

Customer drawing subject to change without notice!

Uncontrolled Copy

Prior Issue	Drawn	Approved	Released	
Revision 2	Date 2011/08/15	Date 2015/11/23	Date 2015/11/23	CONFIDENTIAL: Information contained in this document or drawing is confidential and proprietory to Greiner Bio-One GmbH. This document may not be reproduced for any reason without written permission from Greiner Bio-One GmbH. All rights of design, invention, and copyright are reserved.
Date 2015/09/16	Name forb	Name forb	Name sonntag	