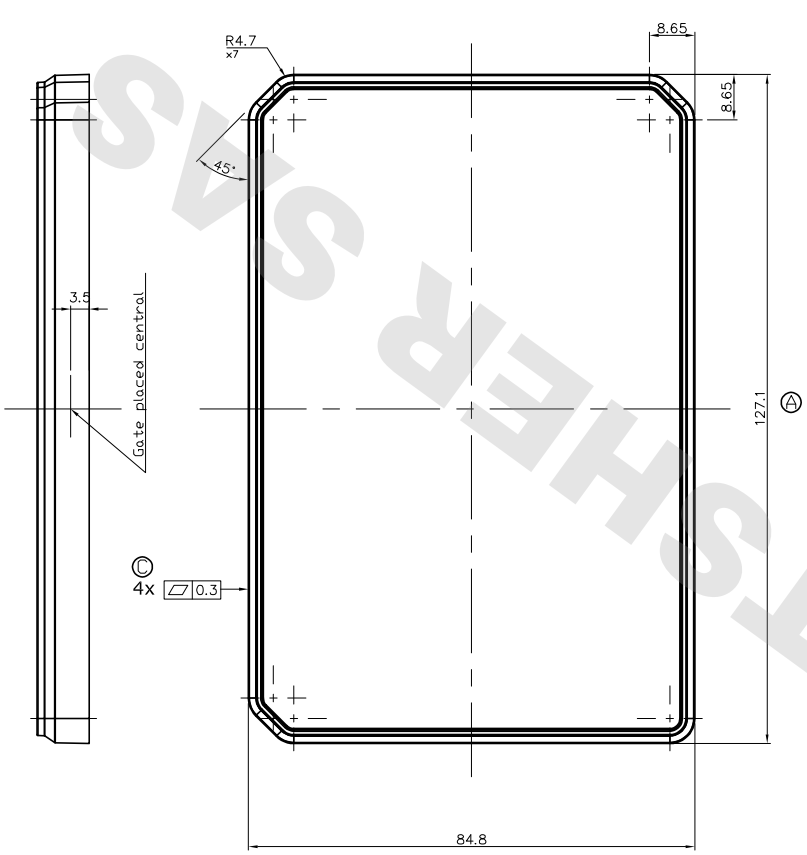

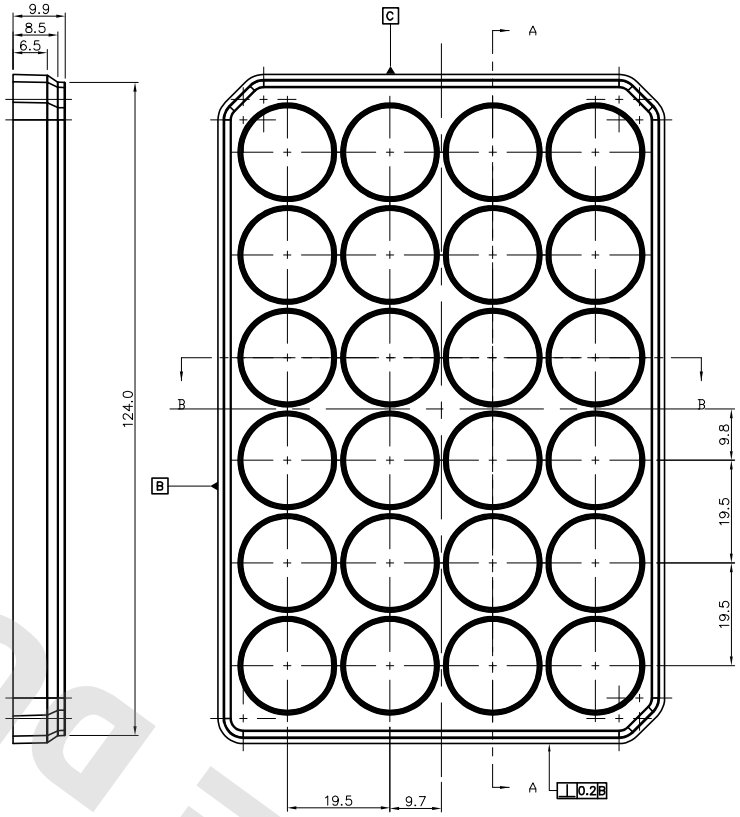

SECTION A-A

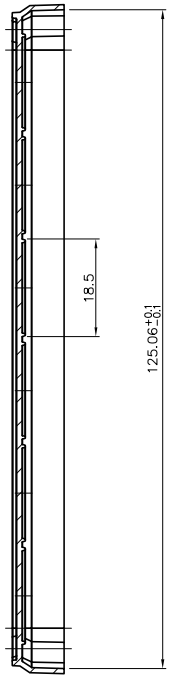

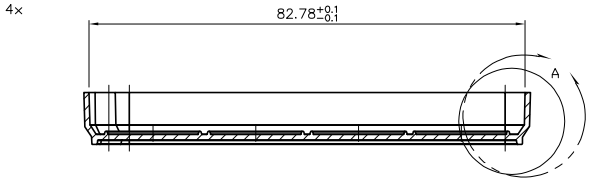

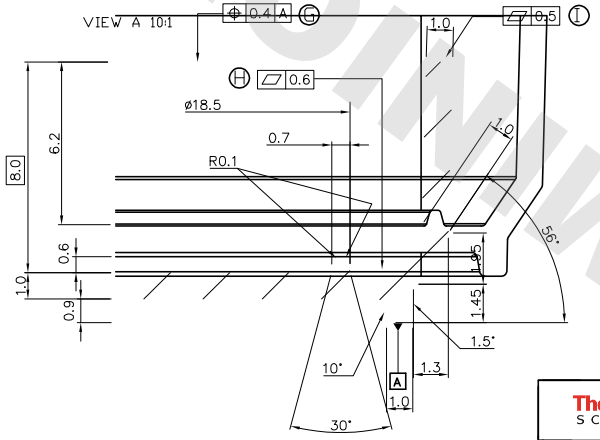

Tolerances unless otherwise specified:
Without decimal: ±0.5 mm
1 place decimal: ±0.1 mm
2 place decimal: ±0.05 mm

Undefined radius: R 0.20 mm
General draft angle: 1.5°

Surfacefrosting: see drawingpage 3.

Change Order no.:	00473	Changed by/date:	HEM 16.04.24	Approved by/date:	PSC 16.04.04	valid from:	16.04.04

ThermoFisher SCIENTIFIC

Roskilde Site • Kamstrupvej 90 • P.O.Box 280
DK-4000 Roskilde • Denmark
Tel +45 4631 2000 • Fax +45 4631 2042
E-mail: info.nunc@thermofisher.com

www.nuncbrand.com

SUBJECT:	DRAWN BY/DATE:	CHANGE ORDER NO.:	VALID FROM:	APPROVED BY/DATE:	FORMAT:
MultiDish 24 Lid 2nd generation	avg 2007.04.23	CO-1763	2007.04.30	JR 2007.04.30	A1

ITEM NUMBER:	MATERIAL:	DRAWING NO.:	VERSION:	PAGE TYPE:	SCALE:	METRIC
	PS	3226	10	-C	1:1(2:1)	

COMMUNIQUE PUTSHER SAS