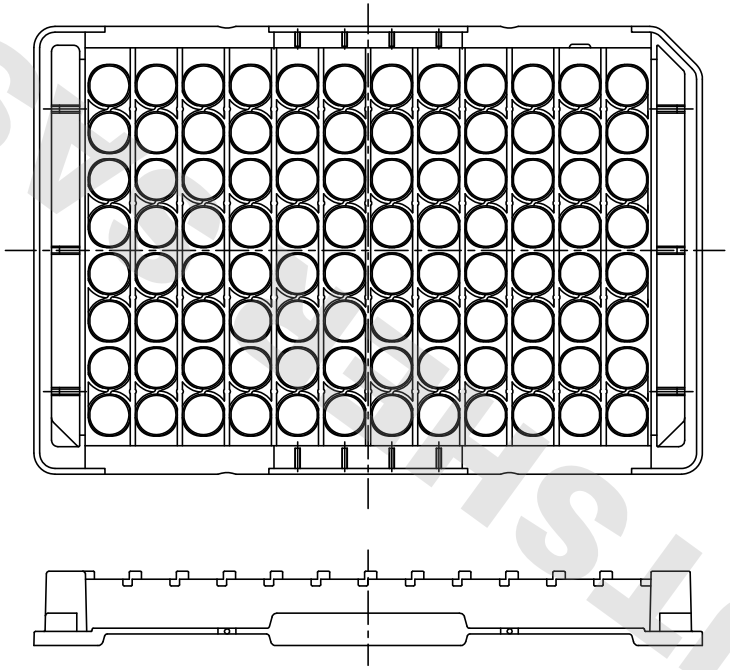

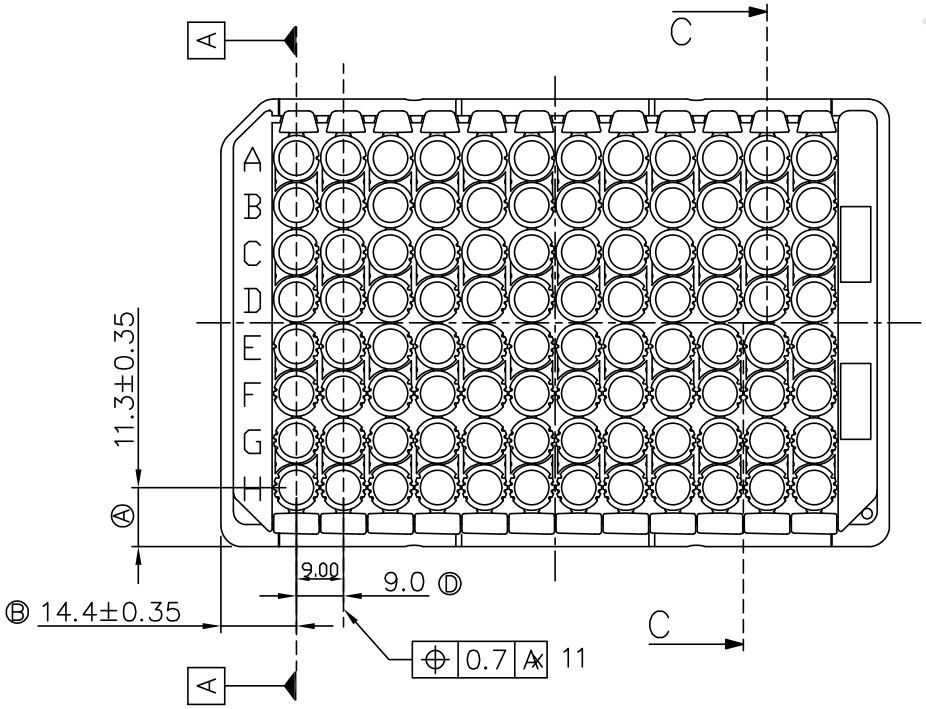

Section CC

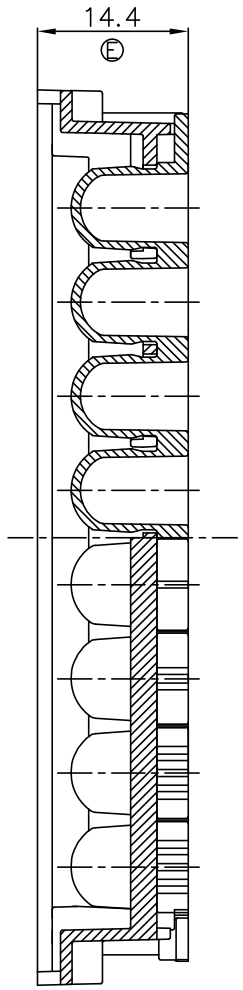

All dimensions is strictly related to the combination af strips mounted in the frame.

Tolerances unless otherwise specified:
Without decimal: ±0.5 mm
1 place decimal: ±0.1 mm
2 place decimal: ±0.05 mm

Roskilde Site • Kamstrupvej 90 • P.O.Box 280
DK-4000 Roskilde • Denmark
Tel +45 4631 2000 • Fax +45 4631 2042
E-mail: info.nunc@thermofisher.com
www.nuncbrand.com

SUBJECT:	DRAWN BY/DATE:	CHANGE ORDER NO.:	VALID FROM:	APPROVED BY/DATE:	FORMAT:
LockWell U8 Module Assembly drawing	BGL/94.08.25	CO-1181	2009.10.30	avg 2009.10.28	A3

ITEM NUMBER:	MATERIAL:	DRAWING NO.:	VERSION:	PAGE TYPE:	SCALE:	METRIC
-	PS/ABS	2460	10	-C	1:1 2:1	First Angle Projection

Confidential - Proprietary