:\GCA\W216930

THIS DRAWING CONTAINS CONFIDENTIAL INFORMATION AND IS A COPYRIGHT OF WHEATON INDUSTRIES INC. IT MAY NOT BE DUPLICATED FOR ANY PURPOSE IN WHOLE OR IN PART WITHOUT THE EXPRESS WRITTEN CONSENT OF WHEATON INDUSTRIES INC.
ALL RIGHTS RESERVED.©
ELECTRONIC OR PAPER COPIES OF THIS PRINT OUTSIDE OF WHEATON'S SYSTEM ARE UNCONTROLLED AND ARE FOR REFERENCE ONLY UNLESS OTHERWISE STAMPED.

THIRD ANGLE PROJECTION

PRODUCT COMPONENTS		
ITEM	QTY	DESCRIPTION
1.	24	BOTTLE & CAP
2.	24	50077397 LABEL (NOT SHOWN)

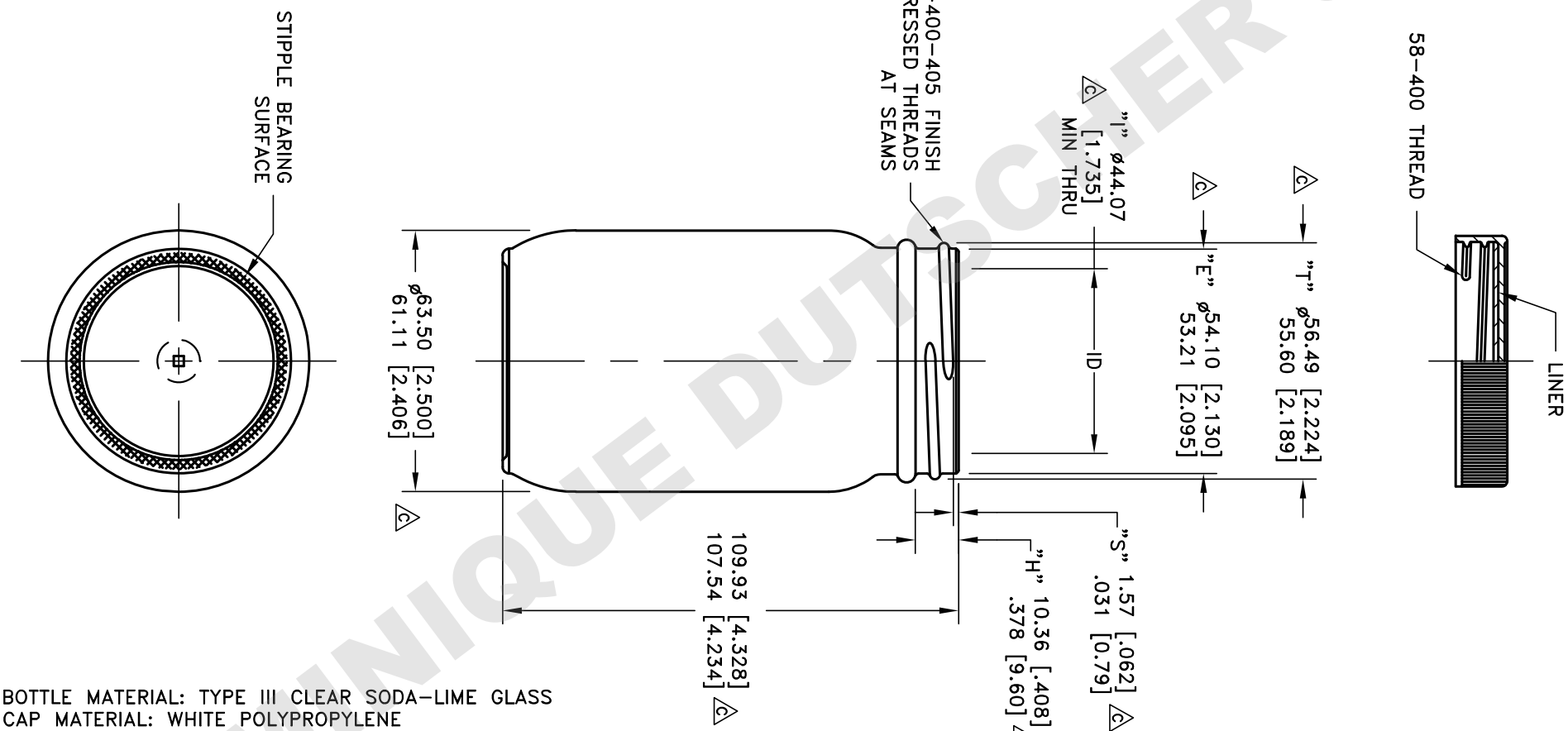

BOTTLE MATERIAL: TYPE III CLEAR SODA-LIME GLASS
CAP MATERIAL: WHITE POLYPROPYLENE
B C LINER MATERIAL: 1.02 [.040] WHITE POLYETHYLENE FOAM WITH 0.13 [.005] NATURAL PTFE-FACED LAMINATED TOGETHER

2. DIMENSIONS ARE IN MILLIMETERS AND [INCHES]. B
1. APPROXIMATE WEIGHT EXCLUDES CAP.
----NOTES----

TITLE 8oz BTL, WM, TYPE III CLR, PP/PTFE LNR B
CAPACITY 247.5cc ±4.6cc OVERFLOW C
FINISH G.P.I. 58-400-405
SCALE: FULL UNLESS NOTED. DO NOT SCALE THIS DRAWING.

DATE DRAWN 05/05/04 | PROJ #
DRAWN BY B. LLOYD | APPROX. WGT. 5.236oz C
CHECKED BY TRJ 5/12/04 | AUTHORIZED CJM 5/12/04

WHEATON®
1501 North 10th Street | Millville, NJ 08332-2038 | USA

DWG. NO: B- W216930

REV	E.C.N. #	DATE
C	2014051410392381	06/05/14 TP
B	2011101211223320	11/02/11 TP
A	20040407081917	05/05/04 BL

DOMINIQUE DUTSCHER SAS