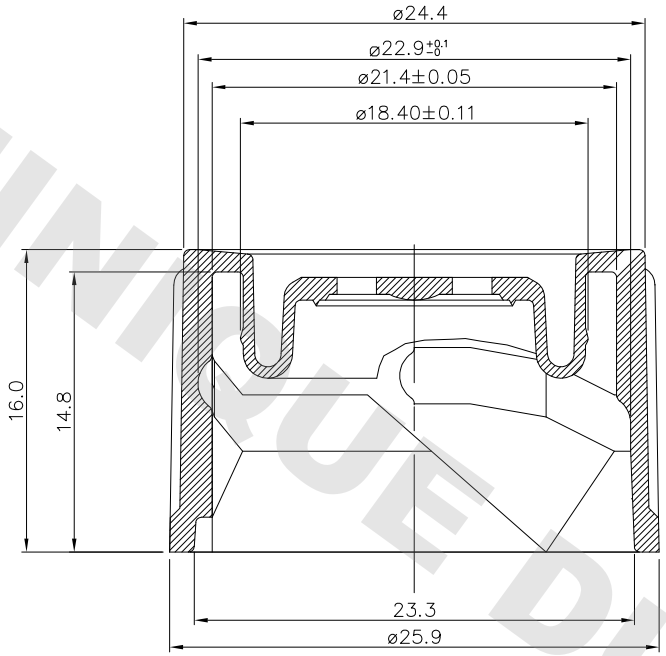

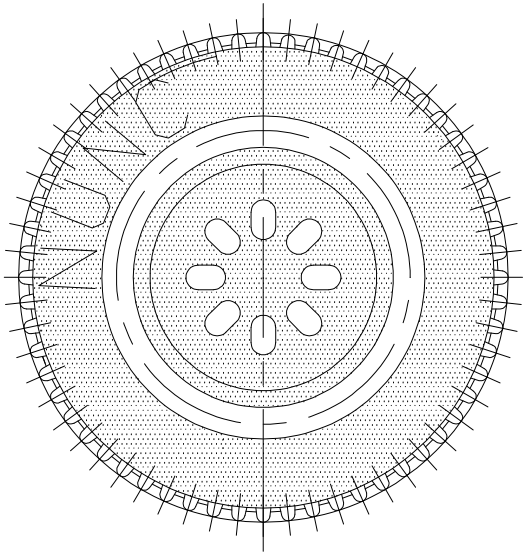

Tolerances unless otherwise specified:
Without decimal: ±0.5 mm
1 place decimal: ±0.1 mm
2 place decimal: ±0.05 mm

Undefined radius: R 0.20 mm

DOMINIQUE DUTSHER SAS

ThermoFisher SCIENTIFIC
Thermo Fisher Scientific
Nunc A/S · Kamstrupvej 90 · P.O.Box 280
DK-4000 Roskilde · Denmark
Tel +45 4631 2000 · Fax +45 4631 2042
E-mail: Info.nunc@thermofisher.com
www.thermoscientific.com

SUBJECT:	DRAWN/MODIFIED BY:	CHANGE ORDER NO.:	VALID FROM:	APPROVED BY/DATE:	FORMAT:
Filtercap for 25 cm² Easy Flask	KGA/2014-09-24	CO-5482	2014.09.24	ROSPSI 2014.09.24	A2
	ITEM NUMBER: -	MATERIAL: PEHD	DRAWING NO.: 2788	VERSION: 10-a	PAGE TYPE: -C / SCALE: 5:1 (10:1) / METRIC