REVISIONS			
REV	DESCRIPTION	DATE	APPROVED

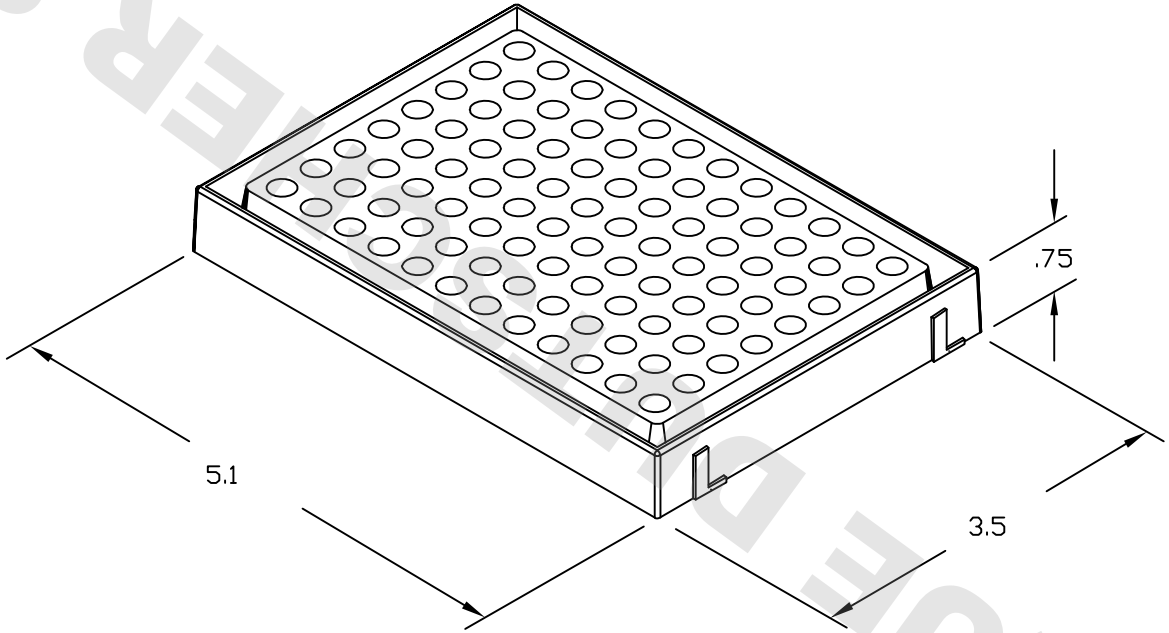

5230

SCIENTIFIC SPECIALTIES INCORPORATED

1901 Ackerman Drive
Lodi, CA 95240

209-333-2320
FAX 209-333-8623

APPROVED BY	DATE	SIZE	JOB NO.	DWG NO.	REV
DRAWN BY C. PORTER	DATE 10/3/95	SCALE	SHRINK	SHEET	

POMINIQUE PHOTOMER SAS