CATALOG NO. (STERILE)	CATALOG NO. (NON-STERILE)	NOMINAL CAPACITY, (mL)	MATERIAL	COLOR
342800-0005	362800-0005	0.5mL	PPCO	NATURAL
342805-0005	362805-0005	0.5mL	PPCO	AMBER

SIZE (NOM VOL mL)...:	0.5	
NOM. BRIM CAP. (mL):	0.9	
NECK FINISH (mm)....:	11	
THREAD (T.P.I.).....:	12	
NOM. WEIGHT (gms)...:	1.2	
DIM. FOR IN./CM.....:	INCH	MM
A (NECK I.D.).....:	.330 ±.005	8.4 ± 0.1
B (HT. W/O CLOSURE):	1.80 ±.01	45.7 ± 0.3
C (DIA).....:	.390 ±.005	9.9 ± 0.1
D (NECK DIA).....:	.510 ±.005	12.9 ± 0.1
N (NECK HEIGHT).....:	.218 ±.005	5.5 ± 0.1
T (MAJOR THD. DIA).:	.430 ±.004	10.9 ± 0.1
E (MINOR THD. DIA).:	.400 ±.003	10.2 ± 0.1
W.T.(NOM. WALL THK):	.035	0.88

2. This is not a production drawing, but is for informational purposes only, and is subject to change without notice.

1. All dimensions are nominal and in inches and millimeters unless otherwise noted.

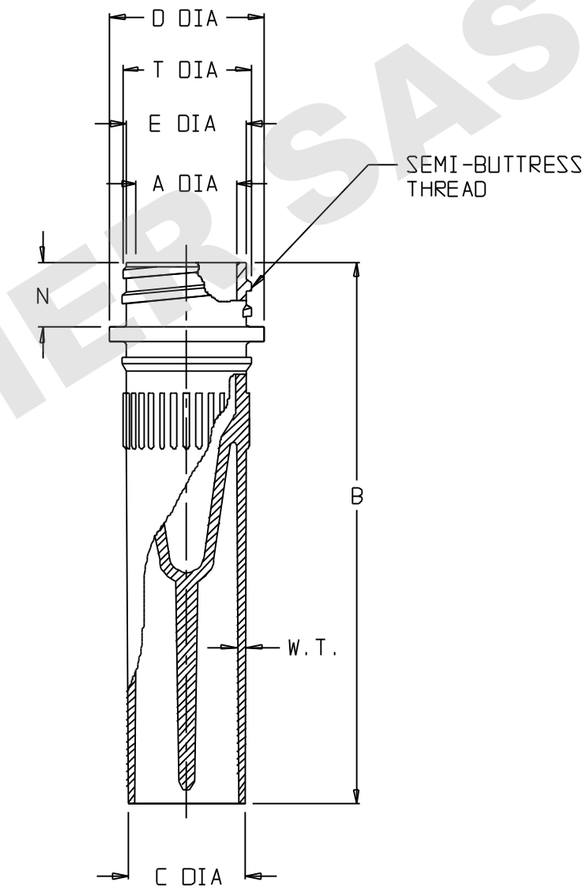

NOT TO SCALE

SPECS ON BACK

CONFIDENTIAL

THIS PRODUCT SPECIFICATION SHEET CONTAINS CONFIDENTIAL AND/OR PROPRIETORY INFORMATION AND IS TO BE USED ONLY FOR THE EXPRESSED PURPOSES AGREED UPON BY AN AUTHORIZED OFFICER OF THERMO FISHER SCIENTIFIC.

ThermoFisher SCIENTIFIC

Therno Fisher Scientific
75 Panorama Creek Drive
Rochester, NY 14625-2385, USA

MADE	APP'D		REV.
JGJ	PVC 1/15/98	PSS 3X-280X-0005	0198
CK'D GRP			

DESCRIPTION:

MICRO PACKAGING VIAL, 0.5mL

DOMINIQUE DUTSCHER SAS